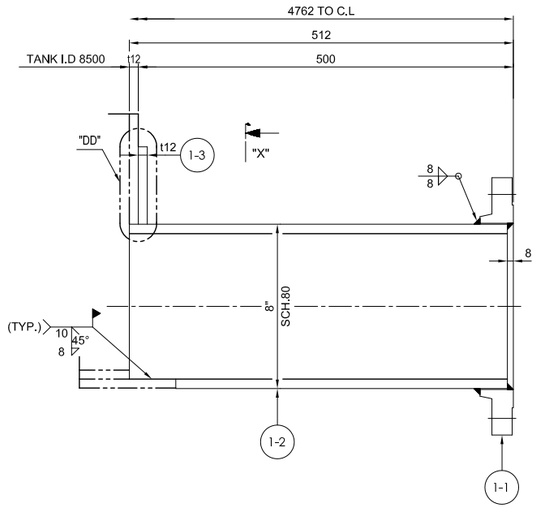

DETAIL OF NOZZLE N3 8"

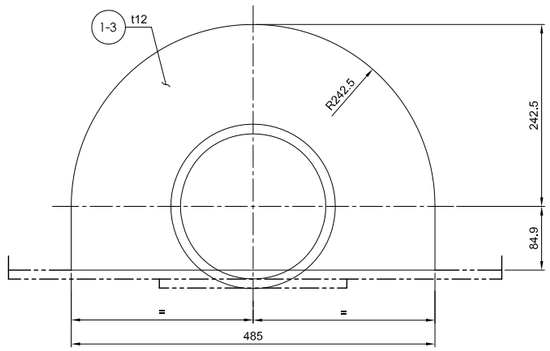

DETAIL OF REINF. PAD

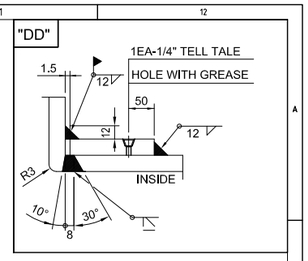

NOTE :

1. ALL DIMENSIONS ARE IN MILLIMETERS UNLESS OTHERWISE SPECIFIED.

ITEM NO.	PART CODE	NAME OF PART	MATERIAL	Q'TY	CONST.&2 YEARS COMML OPER. SPARE	UNIT (EA)	REMARKS
	-3	REIND. PAD	ASTM A36	1			t12
	-2	NOZZLE NECK	ASTM A106 Gr.B	1			8" SCH.80
1	-1	FLANGE	ASTM A105	1			8" ASME #150 S.O.R.F

(1) SET TO BE MANUFACTURED

REV	DATE	DESCRIPTION	DRN	CKD	DESIGN ENG	LEAD ENG	PROJ APP	CLIENT APP'D
00	01/08/26	FINAL	INK	HER	DS	HK	MS	-
B	31/10/25	ISSUED FOR APPROVAL	INK	HER	DS	HK	MS	-
A	14/10/25	ISSUED FOR APPROVAL	INK	HER	DS	HK	MS	-

REVISIONS

CPM PT Citra Palu Minerals

	NAME	DATE
DRAWN	INKO	14/10/25
CHECKED	-	-
DESIGN ENG	-	-
LEAD ENG	-	-
PROJ APP'D	-	-
CLIENT	-	-

COMO ENGINEERS
L2, 38 RICHARDSON ST WEST PERTH, WESTERN AUSTRALIA 6005
+61 8 9432 0100
www.comoeng.com.au

PT.HANAZONO ENGINEERING INDONESIA

PLOT SCALE
AS-SHOWN

NEITHER THIS DOCUMENT NOR ITS CONTENTS MAY BE USED OR REPRODUCED IN ANY MANNER WITHOUT WRITTEN AUTHORIZATION. © COPYRIGHT

THIRD ANGLE PROJECTION
A1 SHEET

TITLE
POBOYO 2000 TPD EXPANSION PROJECT
PROCESS PLANT AREA
ADSORPTION TANK 04 (4430-TK-105)
DETAIL OF NOZZLE 3/3

CLIENT NUM
-

PROJ NUM: PT0061.08
SHT: 1 OF 1

MARK NUM: -
DRG NUM: E2502-000-DWG-507
REV: 00